Stellenbosch
UNIVERSITY
IYUNIVESITHI
UNIVERSITEIT

Validation of Solar Home Systems in Sub-Saharan African Nano-communities

Photo by Stefan Els

About Me

Hochschule Düsseldorf
University of Applied Sciences
HSD

Stellenbosch
UNIVERSITY
IYUNIVESITHI
UNIVERSITEIT

Timo Dietrich

- 4th year mechanical engineering student at HSD in Duesseldorf, Germany
- Field of Study: Energy- and Environmental Technologies
- Exchange student at Stellenbosch University October 2025 – March 2026
- timo.dietrich@study.hs-duessldorf.de

Table of Content

Hochschule Düsseldorf
University of Applied Sciences
HSD

Stellenbosch
UNIVERSITY
IYUNIVESITHI
UNIVERSITEIT

1. Introduction and Problem Background
Energy poverty and challenges of electrification in rural areas

2. Solar Home Systems as a Solution
Concept of SHS and limitations of existing systems

3. Research Approach and System Development
Methodology, objectives, and proposed system design

4. Results and System Evaluation
System costs, benefits, and challenges

5. Conclusion

Core Problem: Energy Poverty

Hochschule Düsseldorf
University of Applied Sciences
HSD

Stellenbosch
UNIVERSITY
IYUNIVESITHI
UNIVERSITEIT

Key Information:

- 9.3 % of the world population has no access to electricity [1]
- 85 % of people without electricity live in in Sub-Saharan Africa [2]
- Rural and in poverty living households are most effected

Electricity Access [3]:

- Urban: 94 %
- Rural: 45 %

- Wealthy: 84 %
- Poverty: 43 %

Consequences:

- No electric lighting
- Dependence on candles, paraffin lamps or flashlights
- Limited education opportunities
- Restricted economic activities

Fig. 1. Rural settlement in South Africa

Challenges Of Grid Expansion

Hochschule Düsseldorf
University of Applied Sciences
HSD

Stellenbosch
UNIVERSITY
IYUNIVESITHI
UNIVERSITEIT

Grid expansion faces three major challenges

Infrastructure Challenges:
- Remote settlements
- Long distances for just a few people

Economic Challenges:
- High infrastructure investment
- Often not profitable

Operational Challenges:
- Grid instability
- Frequent outages (Load Shedding)

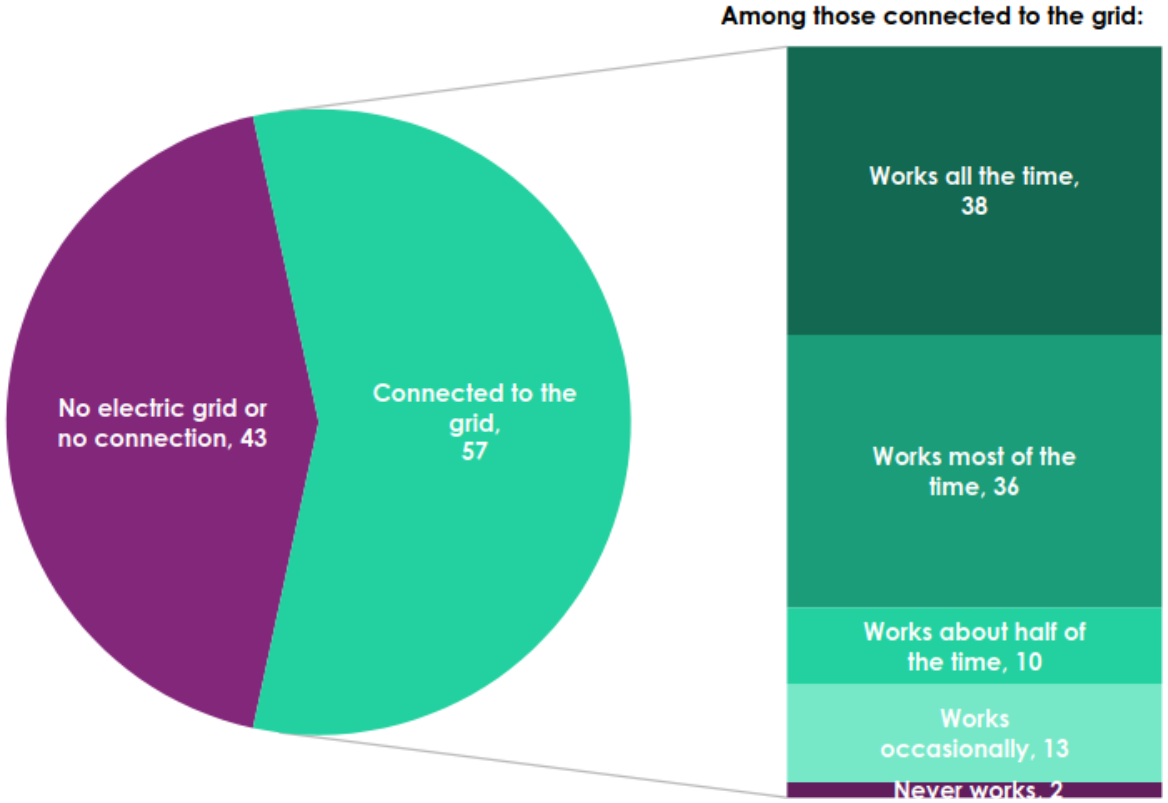

Fig. 2. Pie-chart grid connection [3] (survey of 34 African countries)

=>Decentralized electrification solutions are needed

Energy Needs of Households

Basic energy demand is relatively small:
- LED lighting
- Smartphone charging
- 40-60 Wh per day

Electricity demand after electrification:
- energy appetite => increasing energy demand
- Additional devices purchased over time
- Energy demand rise to over 100 Wh a day

More Applications:
- Radio, small television, bluetooth Speaker,...
- Portable Wifi-router

=> Increasing demand must be considered in the sizing calculations

Fig. 3. LED lighting

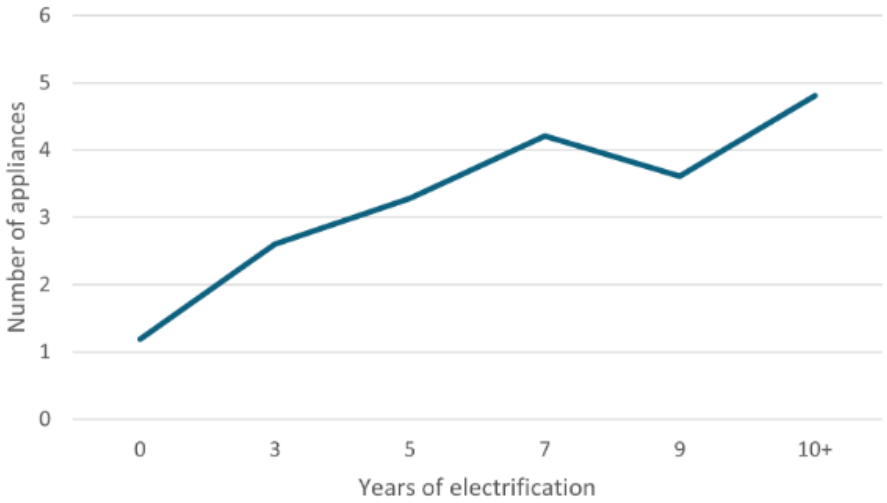

Fig. 4. Number of appliances after electrification [4]

Solar Home System (SHS)
Basic Off-Grid Electricity

Small off-grid photovoltaic (PV) system designed to supply electricity

Main Components:
- PV module
- Battery
- Solar Charge Controller
- Load output

Key Advantages:
- Off-grid electricity access
- Ideal for rural areas
- Clean solar energy
- Low operating costs

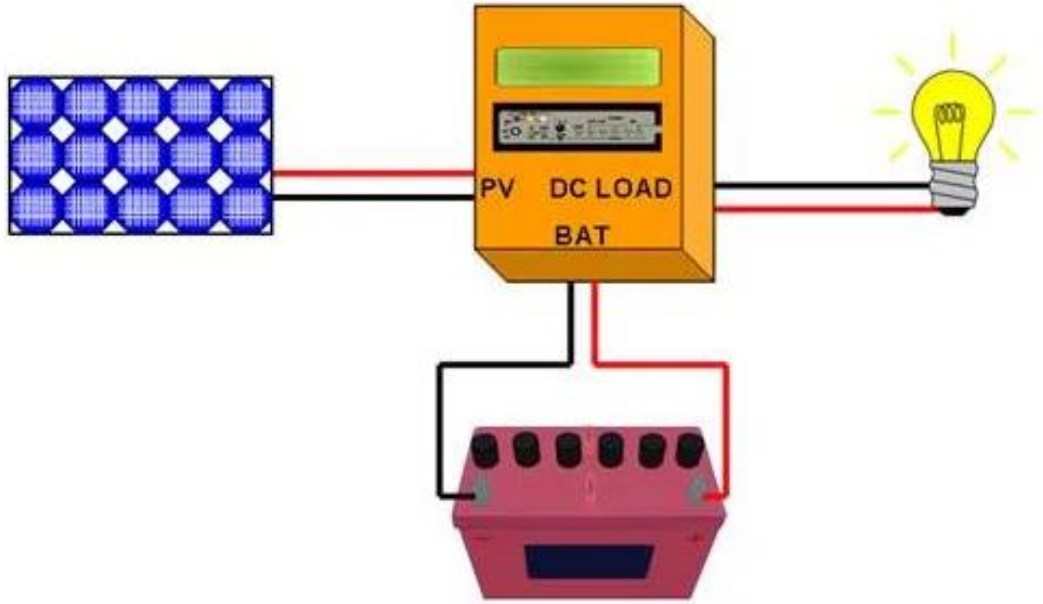

Fig. 5. SHS technical sketch

=> SHS enables basic electrification in remote areas

Why existing SHS do not fully meet User Needs

Hochschule Düsseldorf
University of Applied Sciences
HSD

Stellenbosch
UNIVERSITY
IYUNIVESITHI
UNIVERSITEIT

Technical Limitations:

- Systems are sized incorrect
- AC-Inverters increase complexity
- Limited device compability

Economic Challenges:

- High upfront costs
- Limited Scalability

User Related Challenges:

- Systems do not match household needs
- Operation can be complex

=> Therefore, a new modular and more user-centered SHS-design is needed

Methodology

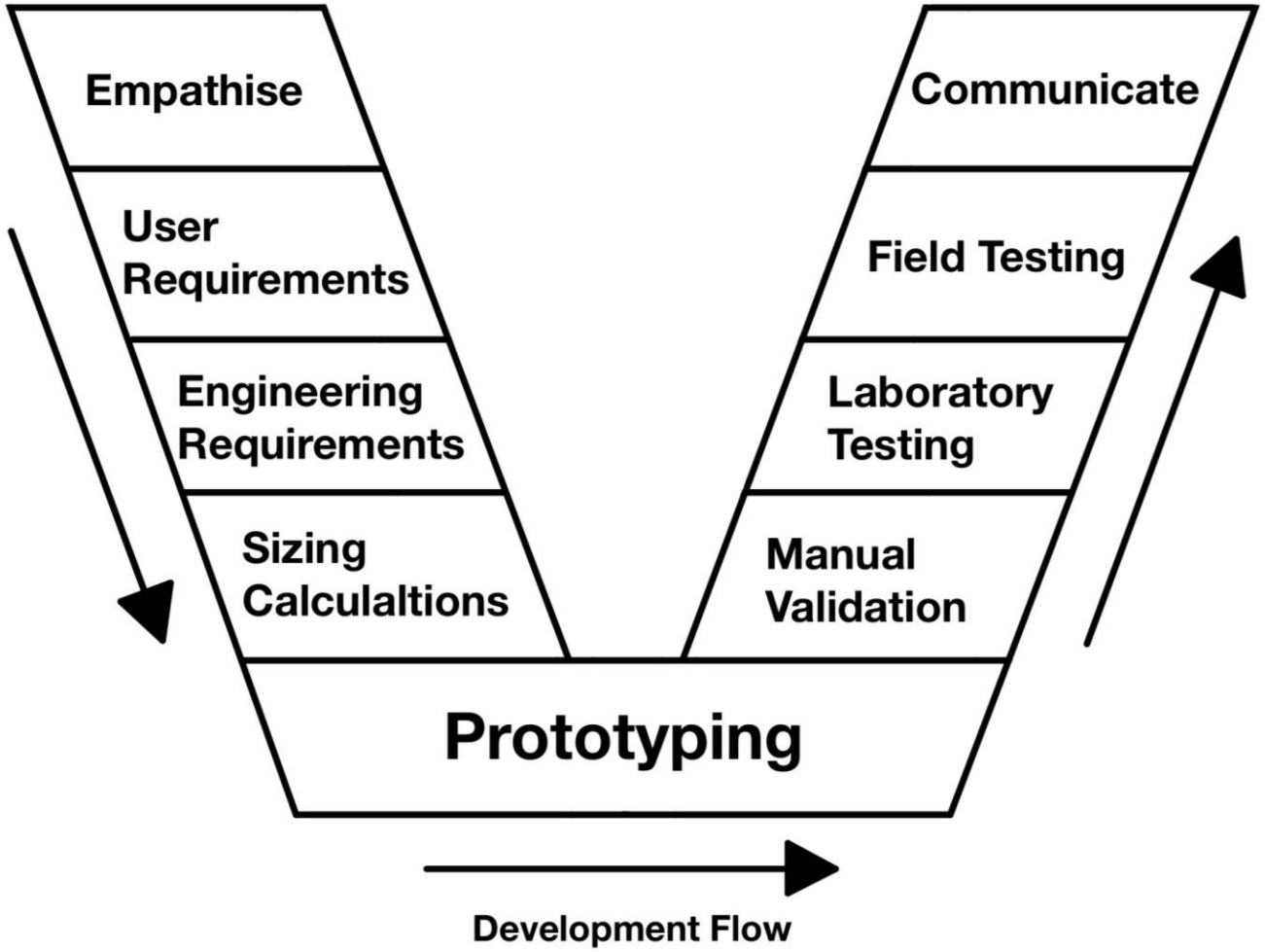

Fig. 6. Used Development Approach

Development Methodology:

Design Thinking:

- User Needs
- User friendly
- Considering social and economic factors

V-Model:

- Definition of system requirements
- System design and prototyping
- Testing and validation

=> Ensures user-centered and technical reliable system

Engineering Requirements (derived from User Needs)

Hochschule Düsseldorf
University of Applied Sciences
HSD

Stellenbosch
UNIVERSITY
IYUNIVESITHI
UNIVERSITEIT

Based on the user needs, the following engineering requirements were defined:

- Cost-effective
- Scalable
- Low-maintenance
- Robust, reliable and long lasting
- Easy to use
- Compatible with modern devices

User Needs => Engineering Requirements => System Design

Upgrade Path

12 V System:
Entry Level Electrification
- Lighting
- Phone Charging

12 V System + USB-C:
Improved device compability
- Faster charging
- More devices

24 V System + USB-C:
improved capacity and capabilities
- Higher power
- Laptops, television

System Design

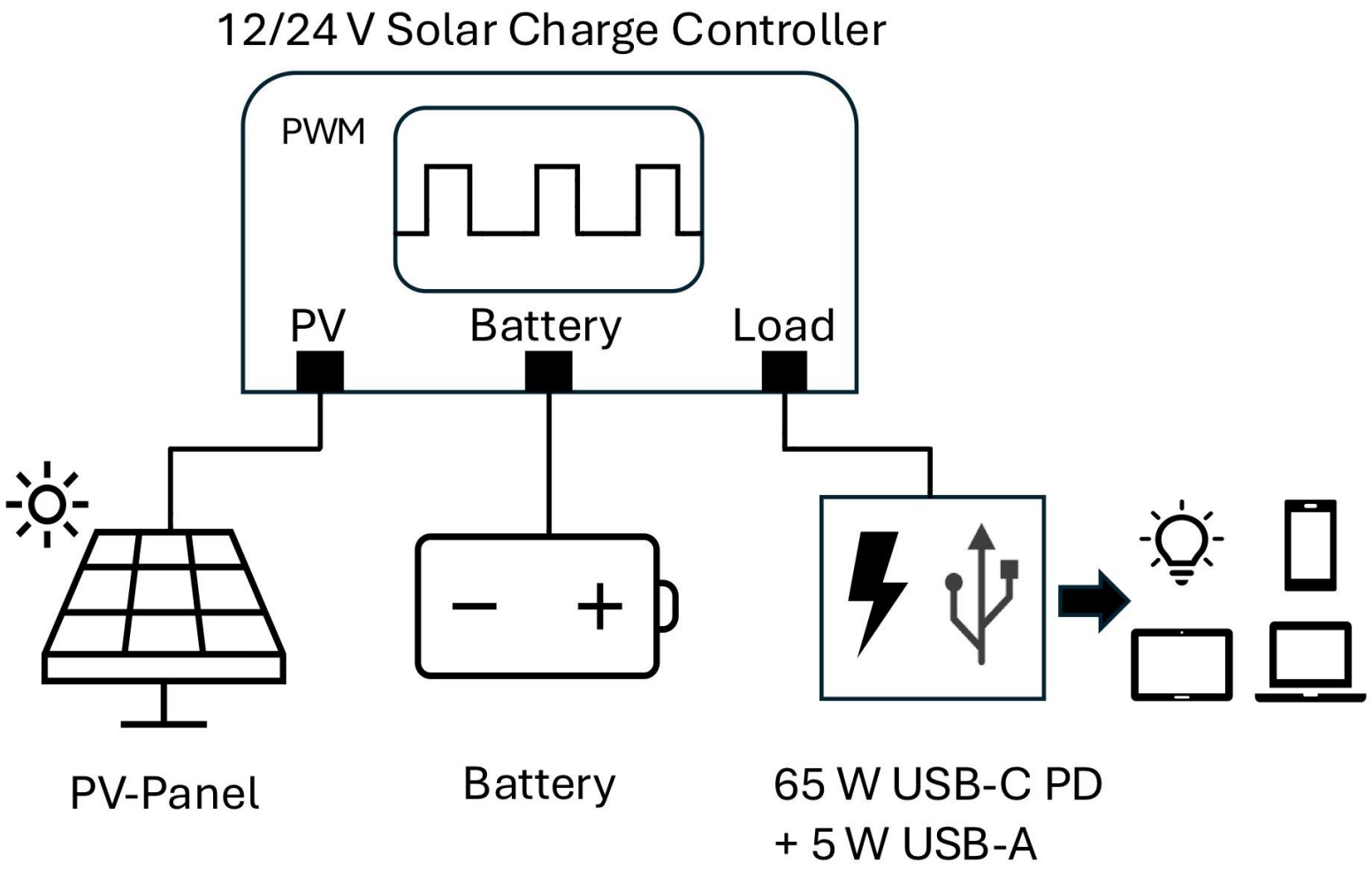

Fig. 7 System Structure

- **LVDC- Low Voltage Direct Current**
- Lower costs and complexity
- More suitable for the actual need

- **Modular System Architecture**
- Upgrade path
- Simple and cost-effective repairs and upgrades

- **Solar Charge Controller**
- Suitable for 12 V or 24 V
- PWM more suitable than MPPT

System Design

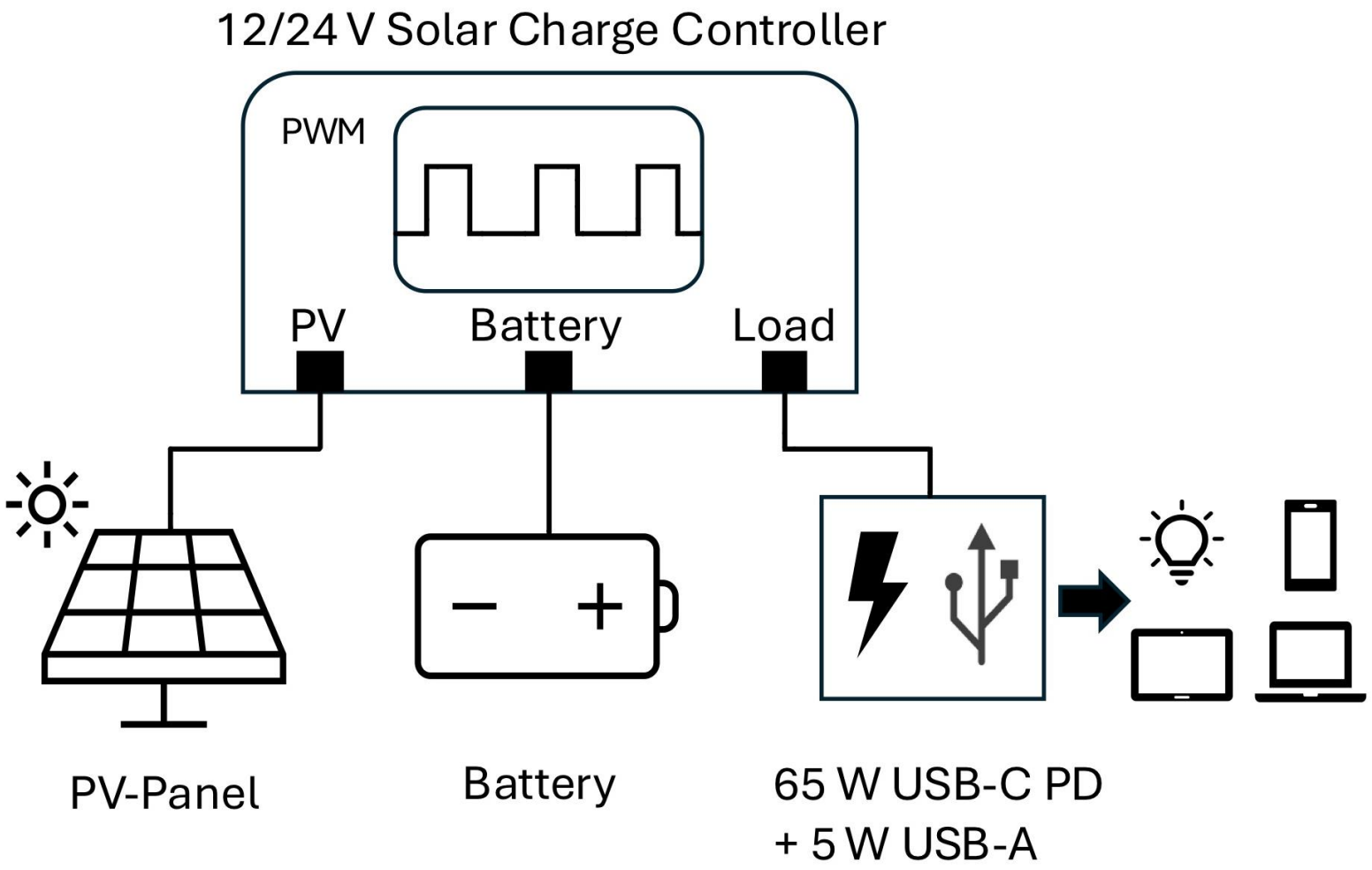

Fig. 7 System Structure

- **PV Module**
- 50/100Wp

- **Battery**
- $LiFePO_4$ 8 Ah/16 Ah
- Long lasting and safe
- High energy density

- Device consume electricity via **USB-outputs**
- 5 W USB-A and 65 W USB-C

- **3D printed housing**
- Protects both the system and the user
- ABS

24 V Prototype

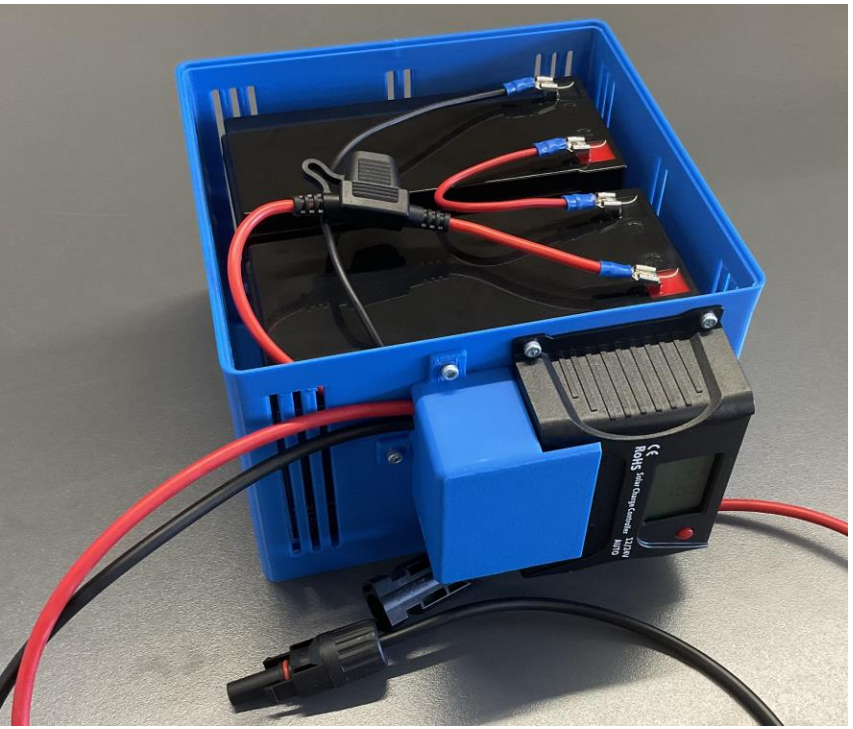

Fig. 8. Top View 24 V Prototype

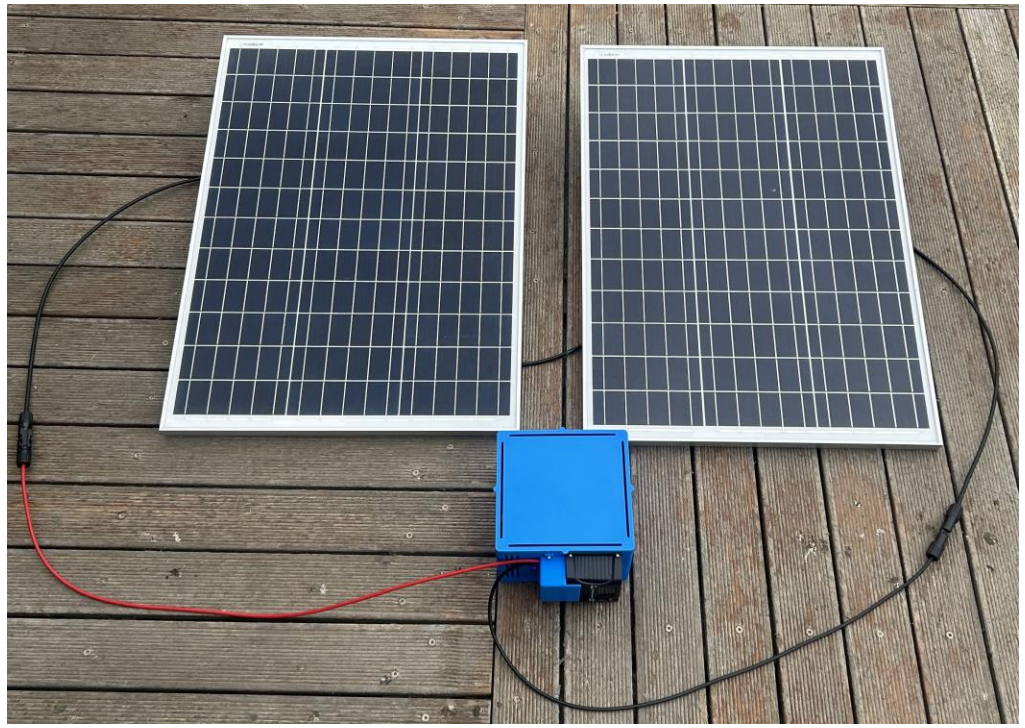

Fig. 9. 24 V Prototype with PV-panels

Fig. 10. USB-C and USB-A output

Cost Comparison and USB-C Usage

Hochschule Düsseldorf
University of Applied Sciences
HSD

Stellenbosch
UNIVERSITY
IYUNIVESITHI
UNIVERSITEIT

Table 1. Costs (March 2026)

Components	*12 V*		*12 V + USB-C*		*24 V + USB-C*	
	Amount	Total price	Amount	Total price	Amount	Total price
Battery	1	750	1	750	2	1500
PV panel	1	681	1	681	2	1362
SCC	1	247	1	247	1	247
Housing	1	507	1	507	1	507
Lights	1	105	1	105	1	105
Type-C device + cables	0	0	1	78	1	78
Fuse Holder	1	40	1	40	1	40
Fasteners (Screws, Nuts)	7	28	9	36	9	36
MC4 Connectors (Pair)	1	17	1	17	1	17
Lugs	2	4	2	4	4	8
Fuse	1	3	1	3	1	3
Total Costs per Unit	***2382***		***2468***		***3903***	

a. All costs are in South African Rand (ZAR)

Table 2. Load Output Comparison

Device	*USB-A*	*USB-C*	
		12 V	*24 V*
LED Lighting	++	+	+
Portable Wifi Router	++	++	++
Smartphone	o	++	++
Tablet	--	+	++
Power Tools Battery	--	--	++
Laptop	--	--	+
Television	--	--	+

a. Charging performance rating: ++ (excellent), + (good), o (limited), - (poor), -- (not supported)

=> The wide range of applications justifies the higher cost
=> Upgrade Path enables more cost-effective upgrades
=> Payback-Period between 12- 20 months (R200 per month)[6]

Benefits of a SHS

Insights from community interviews

Potential Social Benefits:
- Improved lighting conditions
- Better opportunities for studying
- Access to digital communication

Potential Economic Benefits:
- Increased productivity
- Opportunities for small businesses
- Mobile Money service

Health and Safety Benefits:
- reduced indoor air pollution [5]
- Lower fire risk

=> Improvement in quality of life

Fig. 11. Prototype installation in the community

Challenges

Hochschule Düsseldorf
University of Applied Sciences
HSD

Stellenbosch
UNIVERSITY
IYUNIVESITHI
UNIVERSITEIT

Technical Challenges:
- Battery degradation
- Maintenance requirements
- Environmental conditions (dust, heat, shading)

Economic Challenges:
- Financing
- Limited purchasing power of households
- Irregular or seasonal income

Social Challenges:
- User training
- System acceptance

=> Successful implementation requires technical, economical and social solutions

Conclusion

Hochschule Düsseldorf
University of Applied Sciences
HSD

Stellenbosch
UNIVERSITY
IYUNIVESITHI
UNIVERSITEIT

Key Findings:

- SHS provide a practical solution for rural electrification
- Off-grid solar systems can cover basic energy needs
- Modular design enables scalability
- User-centered design improves acceptance

Critical Success Factors:

- Affordability
- Long-term reliability
- Financing models
- User training

=> SHS play a key role in electrification of nano-communities, but They have to be adapted to user needs and local conditions

Stellenbosch
UNIVERSITY
IYUNIVESITHI
UNIVERSITEIT

Thank you
Enkosi
Dankie

Photo by Stefan Els

References

[1]“Access to electricity – SDG7: Data and Projections – Analysis,” IEA. Accessed: Jan. 29, 2026. [Online]. Available: https://www.iea.org/reports/sdg7-data-and-projections/access-to-electricity
[2]“Energy Access Has Improved, Yet International Financial Support Still Needed to Boost Progress and Address Disparities,” World Bank. Accessed: Jan. 29, 2026. [Online]. Available: https://www.worldbank.org/en/news/press-release/2025/06/25/energy-access-has-improved-yet-international-financial-support-still-needed-to-boost-progress-and-address-disparities
[3]K. Han, “Still lacking reliable electricity from the grid, many Africans turn to other sources”.
[4] DOI: 10.1109/POWERAFRICA57932.2023.10363282
[5]Wallach ES, Lam NL, Nuwagira E, Muyanja D, Tayebwa M, Valeri L, Tsai AC, Vallarino J, Allen JG, Lai PS. Effect of a solar lighting intervention on fuel-based lighting use and exposure to household air pollution in rural Uganda: A randomized controlled trial. Indoor Air. 2022 Feb;32(2):e12986. doi: 10.1111/ina.12986. PMID: 35225388; PMCID: PMC9059846.
[6]R. Vermaak, “Design of a Low-Cost Photovoltaic Prototype for Informal and Rural Settlements”. DOI: 10.1109/ICE/ITMC65658.2025.11106576